VALVE SIZE	ACTUATOR SIZE	A	B	C	D (SEE NOTE 1)	E	F	G	J	M	N	P	Q	R	U	V	Y	NUMBER OF TURNS
20	MDT–5	16–1/2	17	27–1/2	8	1–3/4	20––1–1/8	25	14–3/4	4–1/2	5–1/2	8–3/4	10–1/8	24	12–9/16	4–1/2	3–1/2	44
24	MDT–5S	19–3/8	18–1/2	32	8	1–15/16	20––1–1/4	29–1/2	17–1/4	5–1/2	3–5/8	10–1/2	15–15/16	26–19/32	12–9/16	4–1/2	4	136

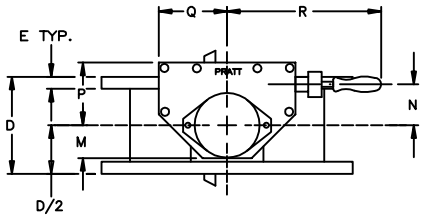

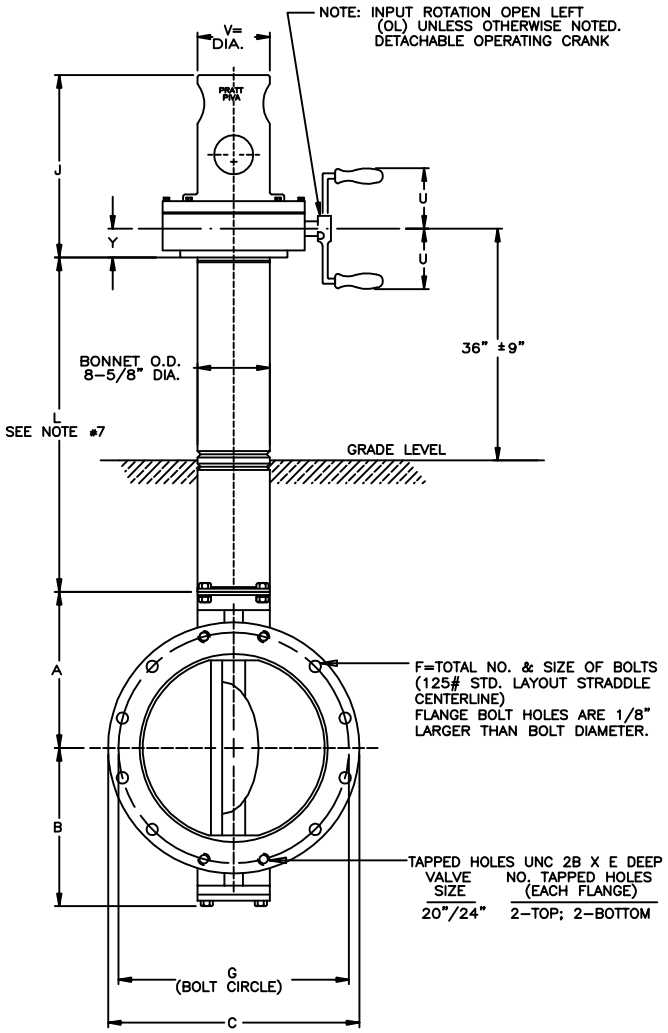

NOTES:

1. ALL DIMENSIONS SHOWN IN INCHES. "D" DIMENSION ± 1/8".
2. DIMENSIONS AND DRILLING OF END FLANGES CONFORM TO THE AMERICAN CAST IRON FLANGE STANDARDS, CLASS 125 (B16.1).
3. **(RECOMMENDATIONS FOR MATING FLANGES)** WHERE INSULATING BUSHINGS ARE USED, IT IS NECESSARY THAT BOLT HOLES BE DRILLED OVERSIZE BY AN AMOUNT EQUAL TO TWO TIMES THE INSULATING SLEEVE THICKNESS TO MAINTAIN THE SAME MINIMUM CLEARANCE FOR BOLTS.
4. VALVES MANUFACTURED AND TESTED IN ACCORDANCE WITH AWWA SPECIFICATIONS C–504.
5. ACTUATOR MOUNTED IN POSITION AS SHOWN.
6. VALVE ASSEMBLIES ARE UNDERWRITERS LABORATORIES (UL) LISTED AND APPROVED FOR USE IN FIRE PROTECTION SYSTEMS.
7. 48", 62", 80", AND 116" BONNET LENGTHS ARE AVAILABLE. (SPECIAL LENGTHS ARE NEGOTIABLE.)

PAINT: ALL PAINT ABOVE GRADE LEVEL: FIRE SAFETY RED
ALL PAINT BELOW GRADE LEVEL: AMERCOAT 370 OXIDE RED

REV	DATE	BY	DESCRIPTION	APP.
1	12/16/15	JUR	REV. DIMS. J,M,Y	

PRATT® HENRY PRATT COMPANY AURORA, ILL.

GENERAL ARRANGEMENT DRAWING
PIVA BUTTERFLY VALVE FM–4
20"/24" 250# FLANGED ENDS
MDT ACTUATOR
DETACHABLE HANDCRANK (UL)

SCALE NONE DATE 3/3/15
DRAWN BY JUR CHECKED BY PPS
APPROVED GA=BORDER
DRWG. NO. GA–11919 REV 1